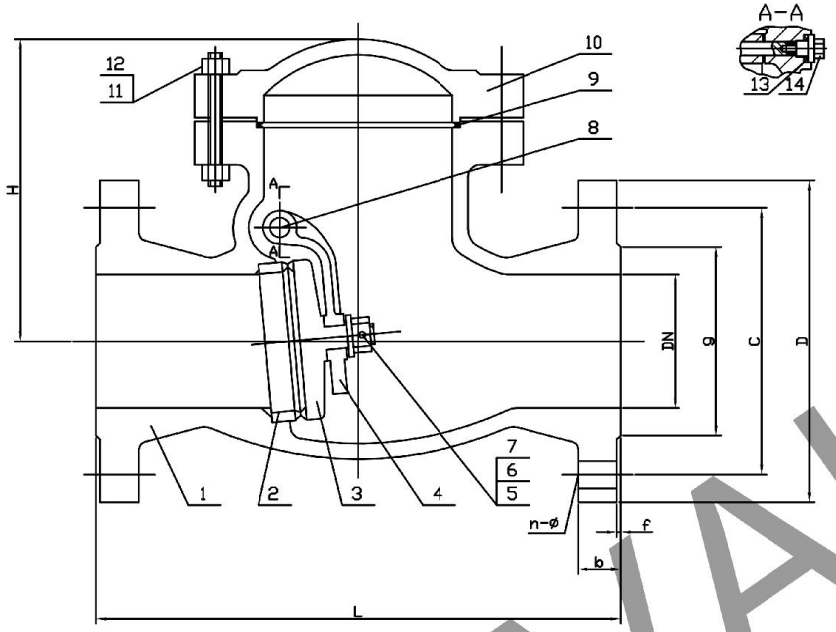

DN	L	g	C	D	b	f	n-Ø	H	weight(kg)
400	900	490	525	580	32	4	16-30	430	498.0
350	800	438	470	520	30	4	16-26	390	395.0
300	700	378	410	460	28	4	12-26	340	255.0
250	600	320	355	405	26	3	12-26	335	203.0
200	500	268	295	340	24	3	12-22	320	157.0
150	400	212	240	285	22	3	8-22	265	83.0
125	350	188	210	250	22	3	8-18	240	57.0
100	300	158	180	220	20	3	8-18	210	37.0
80	260	138	160	200	20	3	8-18	180	25.0
65	240	122	145	185	18	3	4-18	165	22.0
50	200	102	125	165	20	3	4-18	160	16.0
40	180	88	110	150	18	3	4-18	135	10.5

PARTS & MATERIAL LIST

ITEM	PART NAME	MATERIAL
1	Body	GS-C25N
2	Seat Ring	G22.8+ER410
3	Disc	410
4	Rocker	GS-C25N
5	Washer 1	410
6	Nut	410
7	Pin	410
8	Hinge Pin	410
9	Gasket	304+Graphite
10	Bonnet	GS-C25N
11	Stud Bolt	24CRMO5
12	Nut	CK35
13	Washer 2	316L
14	Plug Nut	410

Note:
1.Design and machining in accordance with DIN3352
2.Inspection and test in accordance with DIN3230-T3
3.Face to face dimension in accordance with DIN3202
4.Dimension of connection end flange in accordance with DIN2543

DN40~400 PN16 SWING CHECK VALVE				
CLIENT		DWG REV .NO	00	
P.O.NO		CLASS		
APPROVED BY		HYDROSIATIC TEST (PSI)	SHELL	
REVIEWED BY			SEAT	
MADE BY		AIR TSET		
DRAWING NO	356-X	DATE		
GDVAL VALVE				

GDVAL VALVE