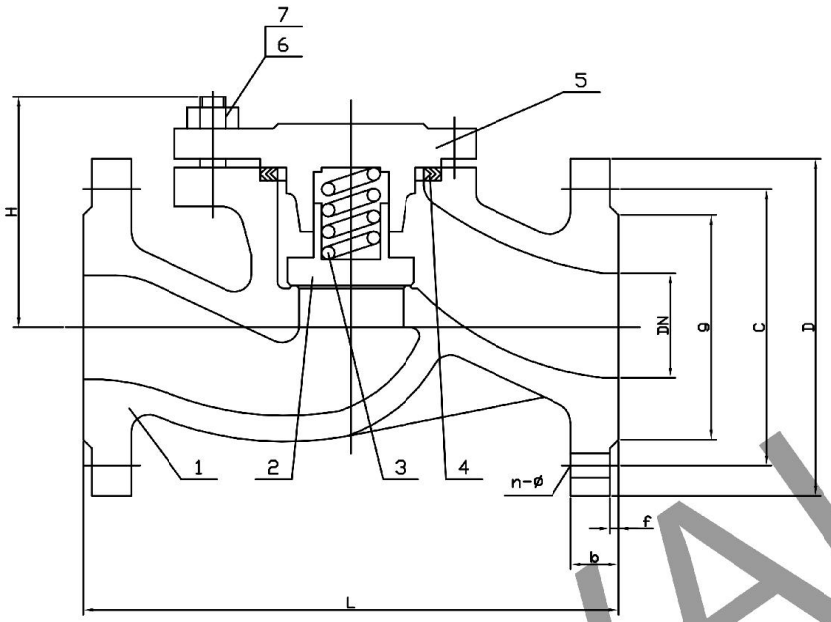

DN	L	g	C	D	b	f	n-Ø	H	weight(kg)
250	730	345	385	450	38	3	12-33	355	230.0
200	660	285	320	375	34	3	12-30	280	179.0
150	480	218	250	300	28	3	8-26	230	98.0
125	400	188	220	270	26	3	8-26	225	63.0
100	350	162	190	235	24	3	8-22	166	47.0
80	310	138	160	200	24	3	8-18	140	23.0
65	290	122	145	185	22	3	8-18	128	18.0
50	230	102	125	165	20	3	4-18	105	12.0
40	200	88	110	150	18	3	4-18	105	8.5
32	180	78	100	140	18	2	4-18	95	6.5
25	160	68	85	115	18	2	4-14	89	5.0
20	150	58	75	105	18	2	4-14	83	4.0
15	130	45	65	95	16	2	4-14	80	3.0

PARTS & MATERIAL LIST

ITEM	PART NAME	MATERIAL
1	Body	GS-C25N
2	Disc	410
3	Spring	1.4308
4	Gasket	1.4308+Graphite
5	Bonnet	GS-C25N
6	Stud Bolt	24CRMO5
7	Nut	CK35

Note:
1.Design and machining in accordance with DIN3352
2.Inspection and test in accordance with DIN3230-T3
3.Face to face dimension in accordance with DIN3202
4.Dimension of connection end flange in accordance with DIN2545

DN15~250 PN40 PISTON CHECK VALVE				
CLIENT		DWG REV .NO	00	
P.O.NO		CLASS		
APPROVED BY		HYDROSIATIC TEST (PSI)	SHELL	
REVIEWED BY			SEAT	
MADE BY		AIR TSET		
DRAWING NO	389-X	DATE		
GDVAL VALVE				

GDVAL VALVE